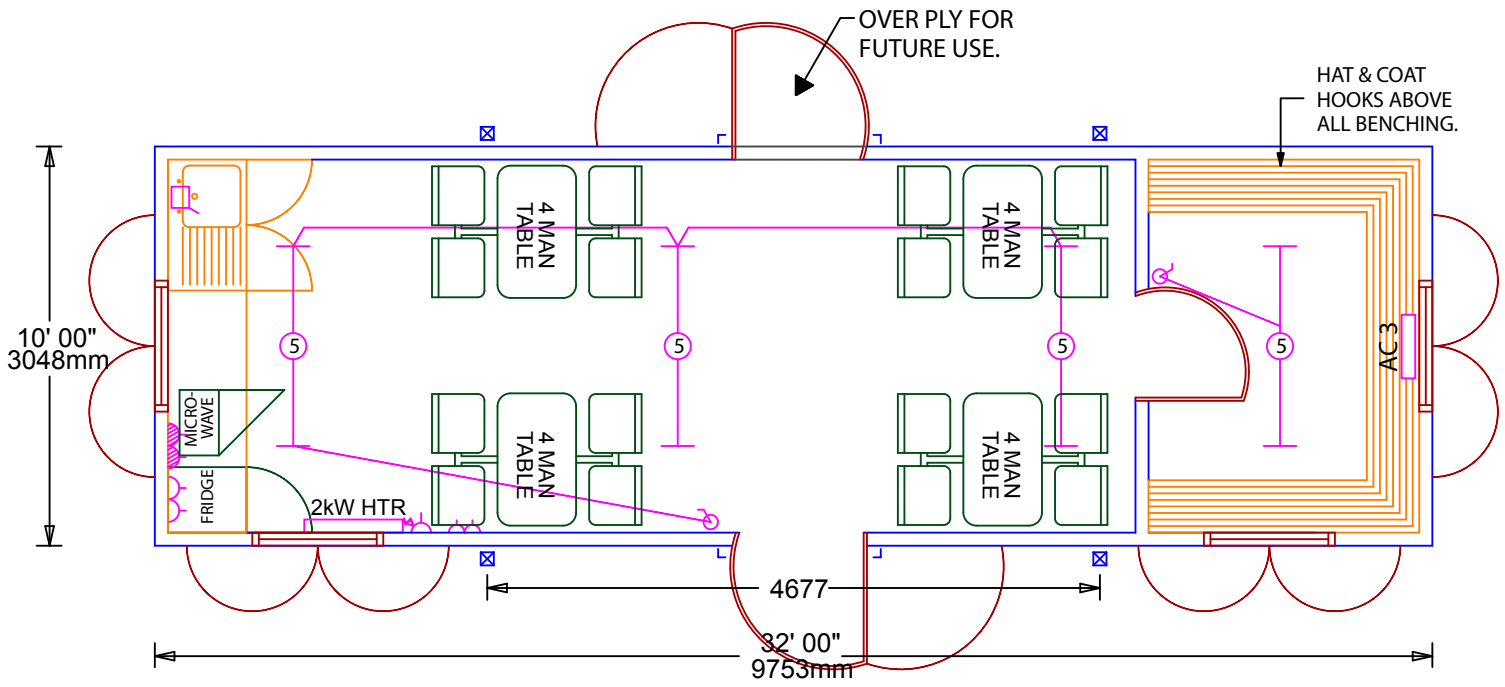

Project: DANZER LTD		
Element: 32' x 10' CANTEEN - DRYINGROOM		Date: 21/07/05
Scale: 1:50@A4	Drawing Ref: DANZ.BH.RH-02	Drawn: R HUNT

Danzer Ltd
Suppliers of quality accommodation
Windmill Lane, Denton, Manchester M34 2JF
Telephone: (0161) 337 8563 Fax: (0161) 337 8735
Freephone: (0800) 035 0443
Website: www.danzer.ltd.uk